HURLINGHAM
The Bath Company

Milton Cast Iron Bath Specifications

Body: Cast Iron
Interior: Vitreous Enamel
Without Tap Holes EMP009
Bath Feet - Painted EMP010
Weight: 155KG
Only Available Without Tap Holes

Customisation options:
- Painted in a colour of your choice

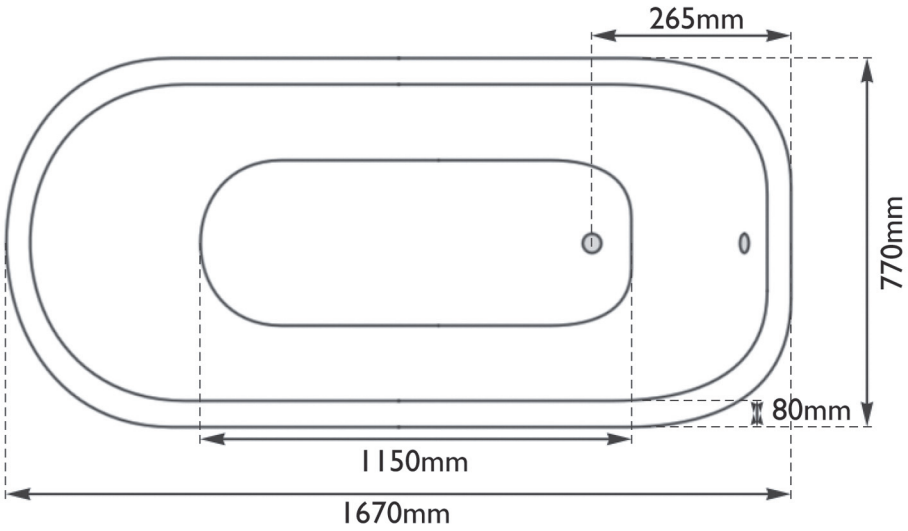

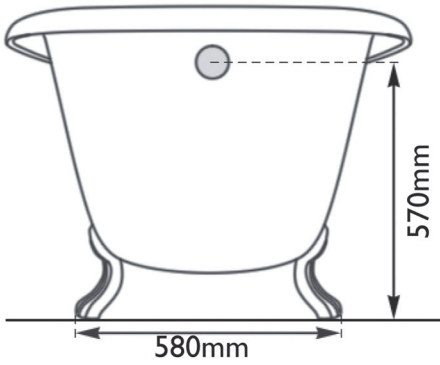

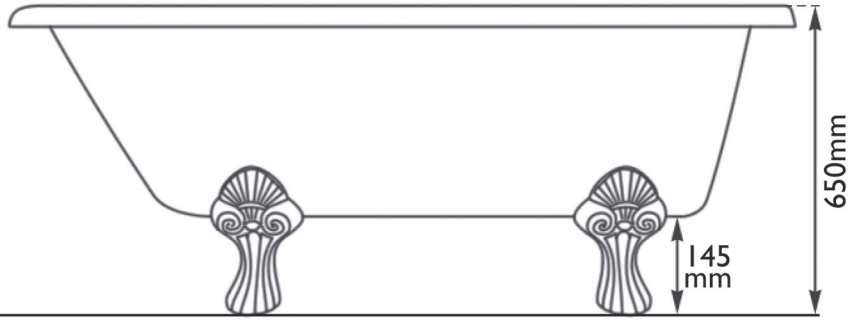

Due to the handmade nature of our products/casting processes, sizing can vary by up to 3%.
First fix should not be undertaken until the product has arrived on site for physical measurements to be taken.

T: 01400 263310 E: sales@hurlinghambaths.co.uk W: www.hurlinghambaths.co.uk

Vitreous Enamel Interior:

A thin layer of glass is fused at high temperatures on to the surface of the cast iron.

• During the process, the vitreous enamel will follow the contours of the hand cast bath or basin, creating natural undulations within the surface texture that gives a handmade appearance.

• There may be small pin holes in the enamel surface and sometimes minute black specks which all result from the nature of the manufacturing process and are to be expected.

Care instructions:

Use a solution of soapy water and apply with a soft cloth or sponge in a brushing motion. Do not use wire brushes, steel wool & abrasive sponge pads. Rinse thoroughly with water immediately after the application of cleaners and wipe the surface leaving it completely dry after the process.

Do not allow cleaners to sit or soak on the surface and avoid dripping taps.

It is important not to use acidic cleaners or sprays as this will affect the surface of the bath and may result in small brown particles building up on the enamel surface or staining.

HURLINGHAM
The Bath Company

Hurlingham 5 Year Guarantee Terms and Conditions

This guarantee does not affect your statutory or other legal rights and is subject to the following conditions:

1. The product was purchased from an authorised Hurlingham retailer, within the United Kingdom or Republic of Ireland.

2. The product is used in domestic applications only.

3. The guarantee applies solely to the original purchaser with proof of purchase and therefore is not transferable.

4. The bath must be available to access for the purpose of inspection, maintenance or replacement.

5. Under no circumstances do Hurlingham accept liability for any consequential loss or damage arising in the connection with any goods, material, or service supplied by Hurlingham.

6. All products should be installed and maintained in accordance with the instructions provided.

7. Repair under this guarantee does not extend the original expiry date. The guarantee on any replacement parts or product ends at the original expiry date.

8. Any part found to be defective during the guarantee period will be replaced without charge, providing that the product has been installed in accordance with the instructions given in this guide and used as the manufacturer intended.

9. If the product is no longer available, Hurlingham will endeavour to provide the nearest equivalent.

The guarantee does not cover:

10. Damage or defects caused by - General wear and tear, including special non-chrome finishes, components such as filters, seals, 'O' rings and washers - Incorrect installation - Repair using non-Hurlingham parts - Accidental or wilful misuse - Corrosion and the use of inappropriate cleaning products. - System debris in cluding the build-up of limescale, which can be controlled through regular servicing and maintenance

11. Compensation for loss of use of the product or consequential loss of any kind. In the interests of continuous product improvement, Hurlingham reserves the right to alter product specifications with out notice.

12. In the unlikely event that you encounter a problem with your Hurlingham bath, please contact the retailer from whom you purchased the bath. The retailer will visit and inspect the bath to advise as to whether it is due to a manufacturing fault or an installation defect. If the problem is due to a manufacturing fault, they will contact us to arrange further inspection and, if deemed to be a manufacturer's defect, a replacement product as soon as possible.